HAPPY D-TYPE

LIFTING HEAVY
CARGO FOR
WORLDWIDE
TRANSPORT
BIGLIFT
HAPPY DIAMOND
BIGLIFT
GIANT
MARINE
BIGLIFT

HAPPY D-TYPE

NEWBUILDING HAPPY D-TYPE
HAPPY DELTA, HAPPY DIAMOND, HAPPY DOVER, HAPPY DRAGON, HAPPY DYNAMIC

HATCH OPENINGS AND ALLOWABLE LOADS

HATCH OPENINGS

Weather deck	hold 1	25.6 x 17.8 m
	hold 2	70.4 x 17.8 m
Tween deck	Hold 1:	25.6 x 17.8 m
	Hold 2:	64.0 x 17.8 m

ALLOWABLE LOADS

Weather deck hatch covers	3.6 t/m
Tween deck hatch covers	5.5 t/m
Tank top	20.0 t/m^2

FLOOR SPACE

Weather deck		2,788 m^2
Tween deck	hold 1	1,456 m^2
	hold 2	1,253 m^2
Tank top	hold 1	398 m^2
	hold 2	1,090 m^2

CRANES

2 x 400 mt + 1 x 120 mt

COMBINABLE
800 mt

TROLLEY
50 mt SWL

PRINCIPAL DIMENSIONS

Length overall	156.93 m
Breadth moulded	25.60 m
Height in hold	13.25 m
Summer draft	10.32 m

REGISTRATION

The Netherlands

CLASS

Lloyds Register X100A1, Iceclass 1A (Finnish-Swedish Ice class rules), Strengthened for heavy cargoes, LA, LI, NAV1, *IWS, XLMC, UMS, with descriptive notes: PCWBT, BWMP, SCM

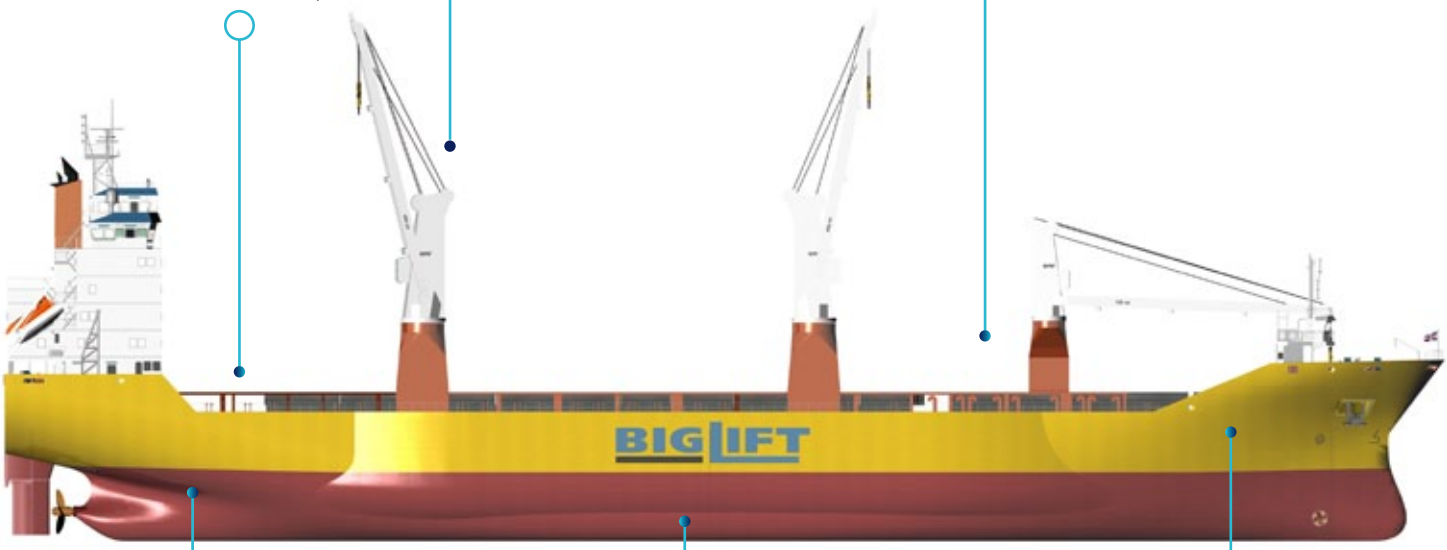

MAIN ENGINE

Wärtsilä	8400 kW
Bowthruster	850 kW
Service speed	17 kn at draft 7 m

CAPACITY

Grain = bale	20,892 m^3
If tween deck installed	19,192 m^3

DEADWEIGHT

At Summer (sea water) draft 17,518 mton inc. tween deck hatch covers, pillars

HAPPY D-TYPE

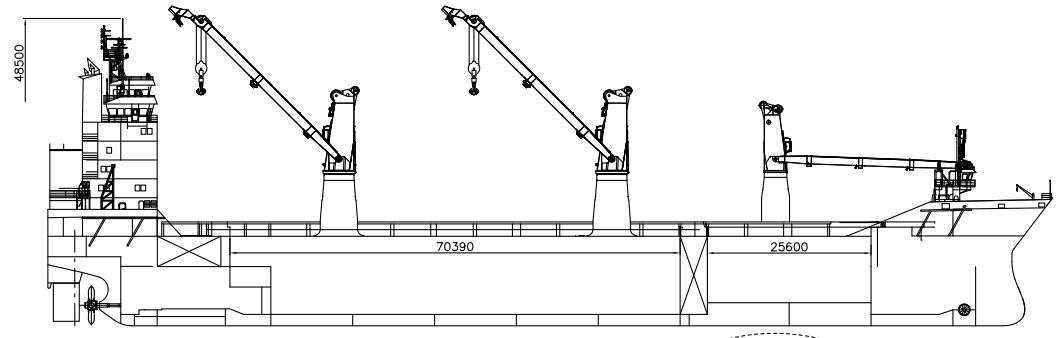

SIDE VIEW

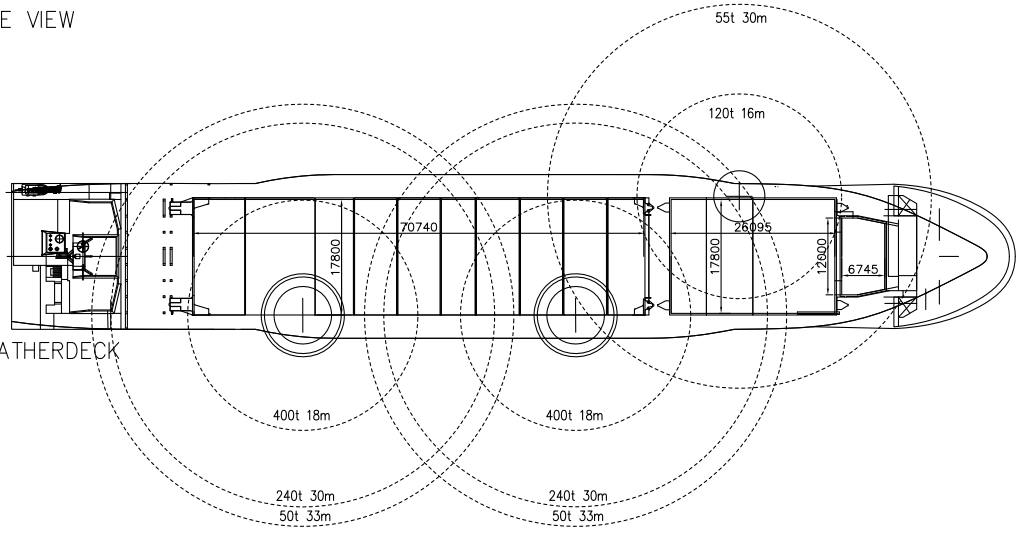

WEATHERDECK

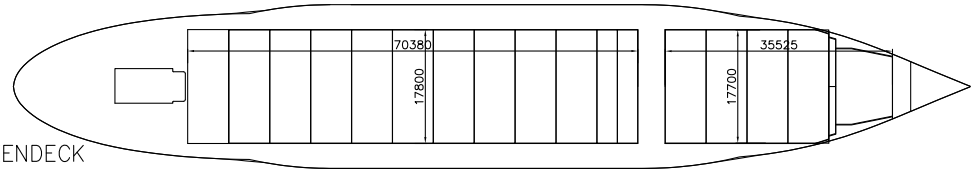

TWEENDECK

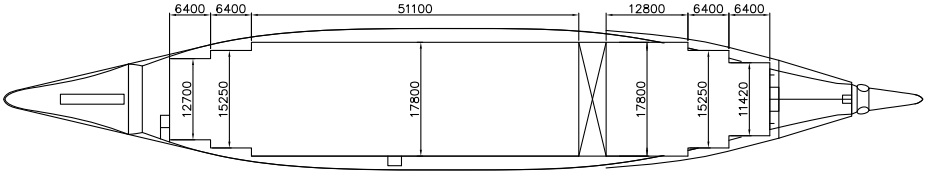

TANKTOP

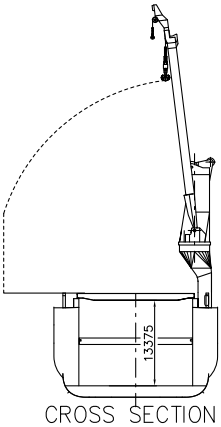

CROSS SECTION
HOLD 2

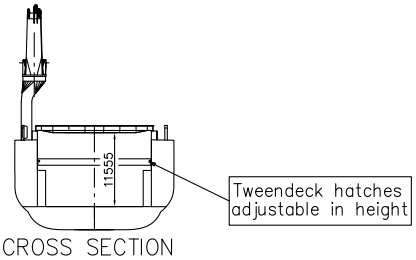

CROSS SECTION
HOLD 1

Vessel TC description - m.v. HAPPY DRAGON

General		
type of vessel		Multi-purpose – Heavy cargo vessel
class		Lloyds Register ✠ 100 A1, Strengthened for Heavy Cargoes, Containers in Holds and on Weather deck Hatch Covers, Timber Deck Cargoes, *IWS, LI, Ice Class 1A FS, Weather deck hatch covers in No 2. Cargo hold may be omitted up to a maximum draught of 7.5 m, ✠ LMC, UMS, NAV1, descriptive notes: ShipRight (SCM), BWMP(S), PCWBT, tanktop suitable for regular discharge by grabs with a maximum unladen weight of 18 tonnes
built		2011
flag		Dutch
port of registry		Amsterdam
owner		Rederij Happy Dragon
P&I club		Standard Steamship Owners' P&I Bermuda
official number		23071 Z 2011
IMO no.		9551961
NSI No.		53220
call sign		PBXI
satelite number	phone	+870 7731 57904
	GSM	+31 6 2380 1346
	fax	+31 20 4489 146
	SAT-C telex	4246 66 110 / 111
	e-mail	pbxi@globeemail.com
Measurements		
Length overall		156.93 m
Length between perpendiculars		147.75 m
Breadth overall		25.60 m
Depth moulded		13.972 m
Draft Summer (salt)		10.351 m
Deadweight	Summer (salt)	18,163 mton exc TWC, 17,518 inc. TWC
Airdraft over keel		47.40 m
Immersion	(min, 5m draft)	27.00 mton / cm
	(max, 9m draft)	31.00 mton / cm
Floor space	weather deck	1788 m^2 (deck space only)
	tween deck	Hold 1: 456 m^2 Hold 2: 1253 m^2
	lower hold	Hold 1: 398 m^2 Hold 2: 1090 m^2
Cargo capacity	hold 0	600 m^3
	hold 1	5032 m^3 (in case tweendeck installed, 400 m^3 less)
	hold 2	15860 m^3 (in case tweendeck installed,1253 m^3 less)

Hatches	
Weather deck	
hatch no. 0	6.740 x 12.000
hatch no. 1	25.596 x 17.800 m
hatch no. 2	70.389 x 17.800 m
	steel lift away, end folding type and rolling type
Tween deck	
hatch no. 1	25.596 x 17.800 m (4 steel pontoons 6.37 x 17.72 m)
hatch no. 2	63.999 x 17.800 m (11 steel pontoons: 2 of 3.17 x 17.70 m, 13 of 6.37 x 17.7 m)
Bulkheads / compartments	removable pontoons for up to 12 compartments
hold heights:	lower hold / tween deck
hatch 1	6.4831m / 4.075 m
hatch 2 low position:	3.027 m / 9.105 m
middle position	6.480 m / 5.895 m
high position	9.620 m / 2.755 m
Total height, no tween decks installed:	hatch 1: 11.555 m, hatch 2: 13.375 m
Deck strength weather deck	2.6 mton/m^2
	3/6 mton/m^2 panels 3-7 of hold 2
tween deck	5.5 mton/m^2
fixed tweedeck + monkey rocks	12.0 mton/m^2
tank top	20.0 mton/m^2
Cargo facilities	
Cranes	
position	
No. 1 crane on PS	120 mton SWL 16m, 90mt - 21m, 55mt - 30m
No. 2 and 3 cranes on SB	400 mton SWL at 6 – 18 m radius
	or 325 mton SWL at 6 – 22 m radius
	or 200 mton SWL at 4.5 – 30 m radius
	or 240 mton SWL at 5 – 30 m radius
Cranes 2 and 3 working in tandem:	max 800 mton SWL (subject to cargo details) (basis list = 0)
auxiliary hoist cranes 2 and 3	50 mton SWL at 6.5 – 33 m radius
Lifting beams	
capacity / length	2 units, SWL 440 mton, length 12 m between outer lifting points. Own weight per beam 16 mton

Mechanical details	
mechanical ventilation, empty holds	hatch 0: 11x per hour hatch 1: 20x per hour hatch 2: 15x per hour
CO_2	yes
evaporator	yes; capacity 20t/day
power supply	440 volts, 60 Hz
reefer plugs	up to 1275 kW, 60 pcs
Tank capacities	
ballast	7,675.00 m^3
fresh water	200.00 m^3
IFO	1,500.00 m^3
MDO	310.00 m^3
Speed/Consumption	
Speed through water with fuel consumption basis IFO 380 centistokes; wind not exceeding 2 beaufort; calm smooth sea without current; deep water; draft 7 m, 17.0 knots, draft 8 m	
Fuel consumption per day (even keel)	abt. 25 mt IFO 380 cSt at 14.5 kn abt. 30 mt IFO 380 cSt at 15.5 kn abt. 37 mt IFO 380 cSt at 16.0 kn no MDO at sea, except for manoeuvring
In port:	abt. 3.8 ton MDO per day, cargo gear working abt. 1.7 ton MDO per day, cargo gear idle
Engine	
type	Wärtsilä 8400 kW engine
bow thruster capacity	Bowthruster 850 kW
ballast pumps, capacity	2 pumps, each approx. 500 m^3/hr
ballast Intering system	4 tanks total 436 m^3 max. ballasting 200 m^3 in 3 minutes
Cargo space	
tween deck hatch 1 open	22,775.90 m^3, hatch 2 NOT installed
tween deck hatch 1 closed	21,606.40 m^3, hatch 2 in low position 21,624.90 m^3, hatch 2 in middle / high position

		TEU	FEU	+	45'	+	TEU
container capacity	deck	630	145	+	92	+	156
	hold	461	215			+	31
(upto IMO line)		1091	360	+	92	+	187

(basis 20 ton / teu, 30 ton / feu)

stackloads	deck	52 ton/stack TEU,	60 ton/stack FEU
	tween deck	48 ton/stack TEU,	52 ton/stack FEU
	hold	125 ton/stack TEU,	175 ton/stack FEU

Remarks: Vessel is fully equipped Vessels is fully self-sustained.	

All details are approximate and without guarantee. They must not be used as basis for charter parties or contracts without owner's explicit written authority.

GIANT MARINE, General Agents for BigLift Shipping B.V

To contact us, click on the "CONTACT US" button available on each page of this website and fill up the form.